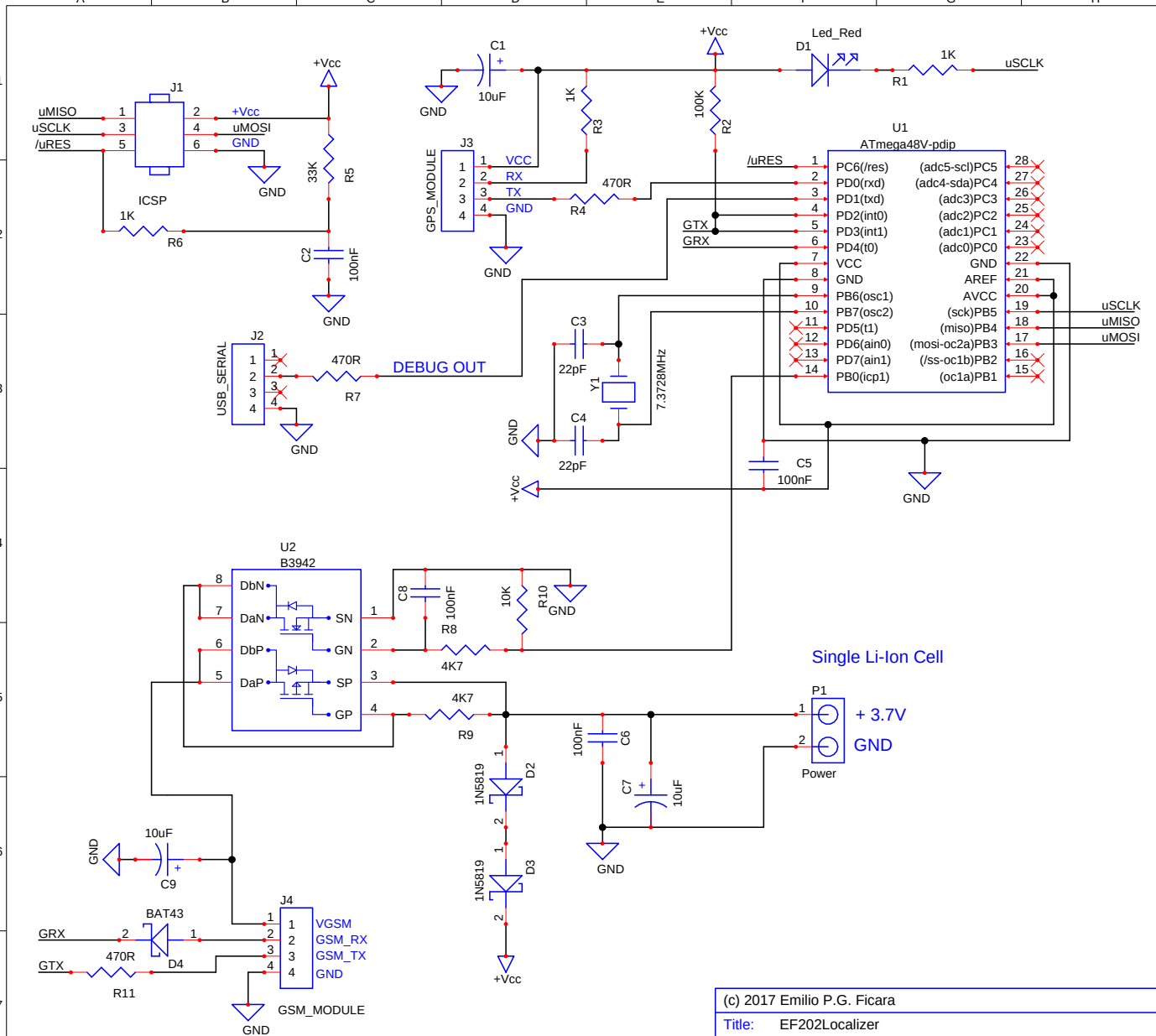
J1
uMISO
uSCLK
/uRES
+Vcc
uMOSI
GND
ICSP
1K
R6
33K
R5
C2
100nF
C1
10uF
1K
R3
100K
R2
Led_Red
D1
R1
uSCLK
J3
GPS_MODULE
VCC
RX
TX
470R
R4
U1
ATmega48V-pdip
/uRES
GTX
GRX
PC6(/res)
PD0(rxd)
PD1(txd)
PD2(int0)
PD3(int1)
PD4(t0)
VCC
GND
PB6(osc1)
PB7(osc2)
PD5(t1)
PD6(ain0)
PD7(ain1)
PB0(icp1)
(adc5-scl)PC5
(adc4-sda)PC4
(adc3)PC3
(adc2)PC2
(adc1)PC1
(adc0)PC0
AREF
AVCC
(sck)PB5
(miso)PB4
(mosi-oc2a)PB3
(/ss-oc1b)PB2
(oc1a)PB1
uSCLK
uMISO
uMOSI
J2
USB_SERIAL
470R
R7
DEBUG OUT
C3
22pF
C4
22pF
Y1
7.3728MHz
C5
100nF
U2
B3942
DbN
DaN
DbP
DaP
SN
GN
SP
GP
C8
100nF
R8
10K
R10
4K7
4K7
R9
Single Li-Ion Cell
P1
+ 3.7V
GND
Power
100nF
C6
C7
10uF
1N5819
D2
1N5819
D3
10uF
C9
BAT43
D4
470R
R11
J4
GSM_MODULE
VGSM
GSM_RX
GSM_TX
GND
(c) 2017 Emilio P.G. Ficara
Title: EF202Localizer
Size: A
Project: EF202Localizer
File: Root.sch
Date: 9 Apr 2017
Sheet: 1 of 1
Revision 170423