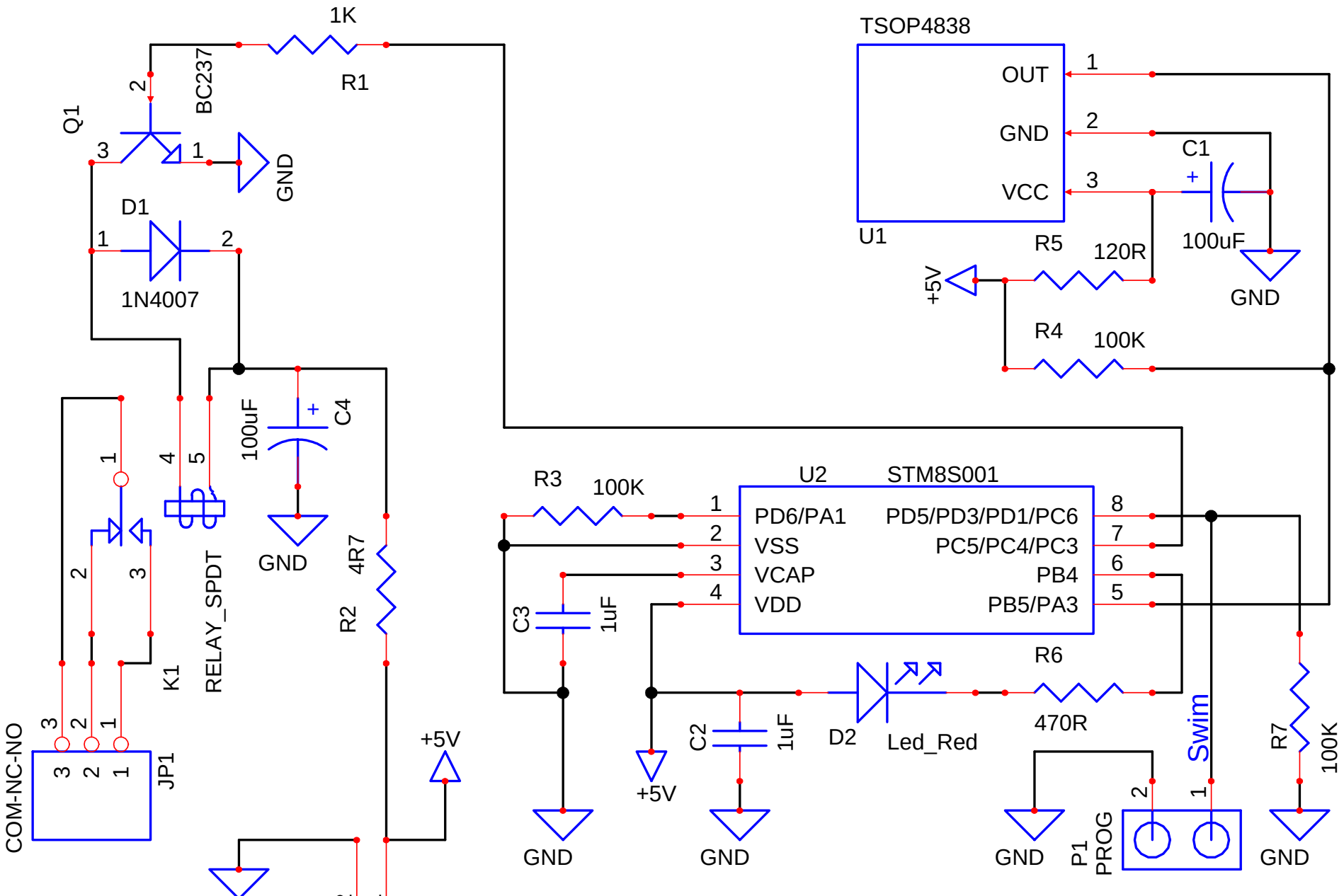

Ficara Emilio Pietro Giovanni - http://ficara.altervista.org

Title: IrSwitch		
Size: A4	Project: EF	File: Root.sch
Date: 17/06/2018	Sheet: 1 of 1	Revision: 180617